GB900 & BB1000PLATE

Exploded parts diagram

(Image shown is GB900)

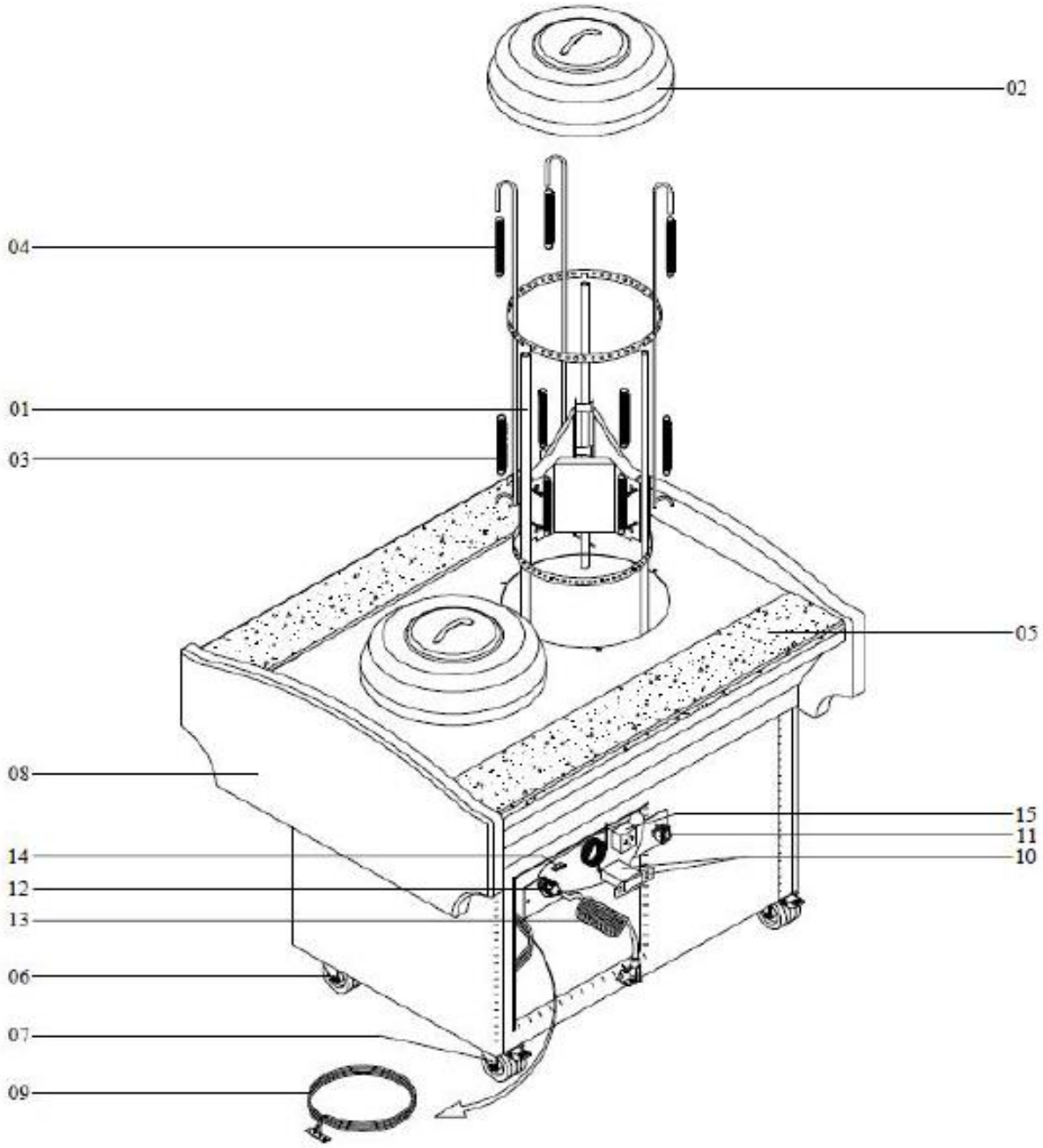
02
04
01
03
05
08
15
11
14
10
12
13
06
07
09

Number	Description
1	Pulley
2	Lid
3	Spring
4	Spring
5	Granite
6	Castor
7	Braked Castor
8	Wooden Panel
9	Heating Element
10	Controller
11	Switch
12	Cable Gromit
13	Power Cord
14	Cable Clamp
15	Plug Holder

***** Please contact Spares for assistance *****